# MAGNETORESISTIVE SENSOR

# WIRING DIAGRAM

APPLICATION BRIEF

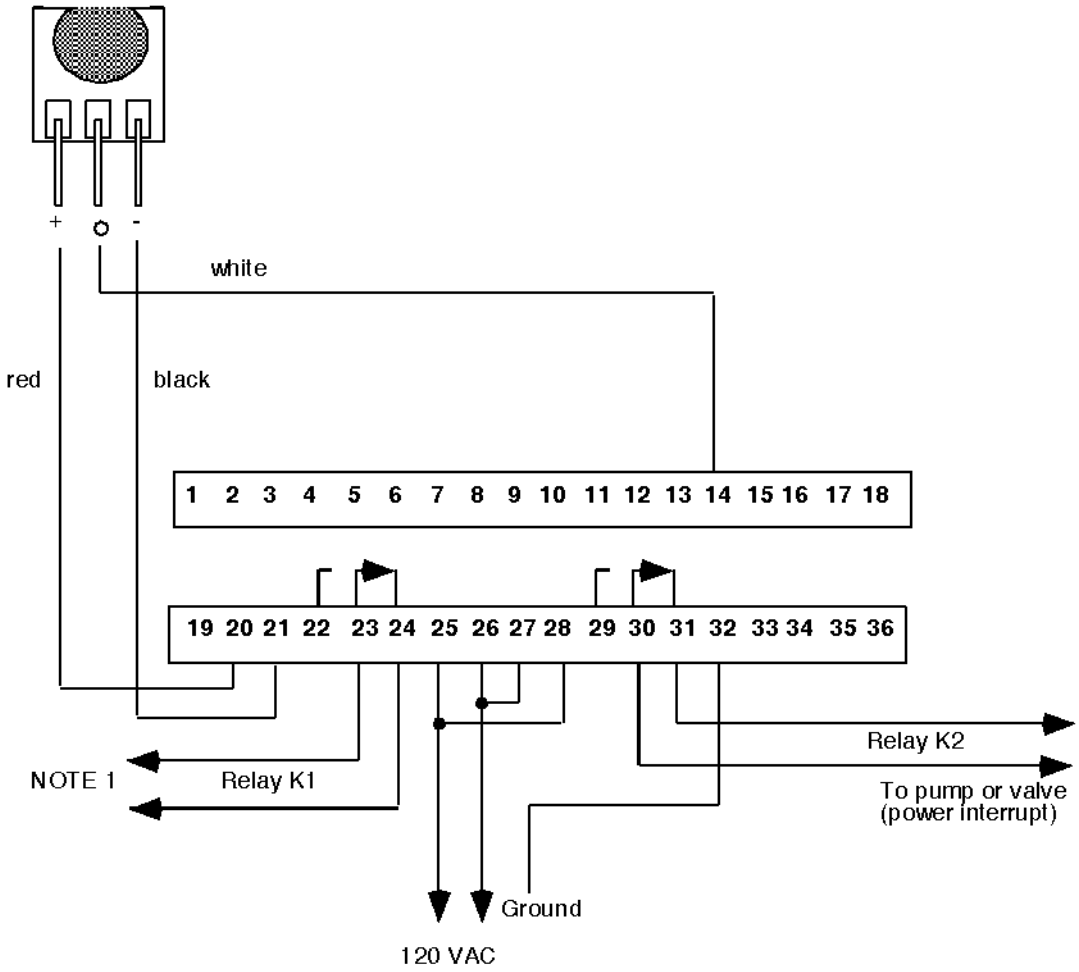


## NOTES

1. Refer to page 6 of IOM-036 for connections to relay K1.
2. Use shielded cable for transmitter connections. Connect shield to terminal 32 only.

**BadgerMeter,Inc.**
P. O. Box 245036 Milwaukee, WI 53224-9536
Telephone: (414) 355-0400
Fax: (414) 355-7499