FT 420 & PC-100 CONTROLLER

WIRING DIAGRAM

APPLICATION BRIEF

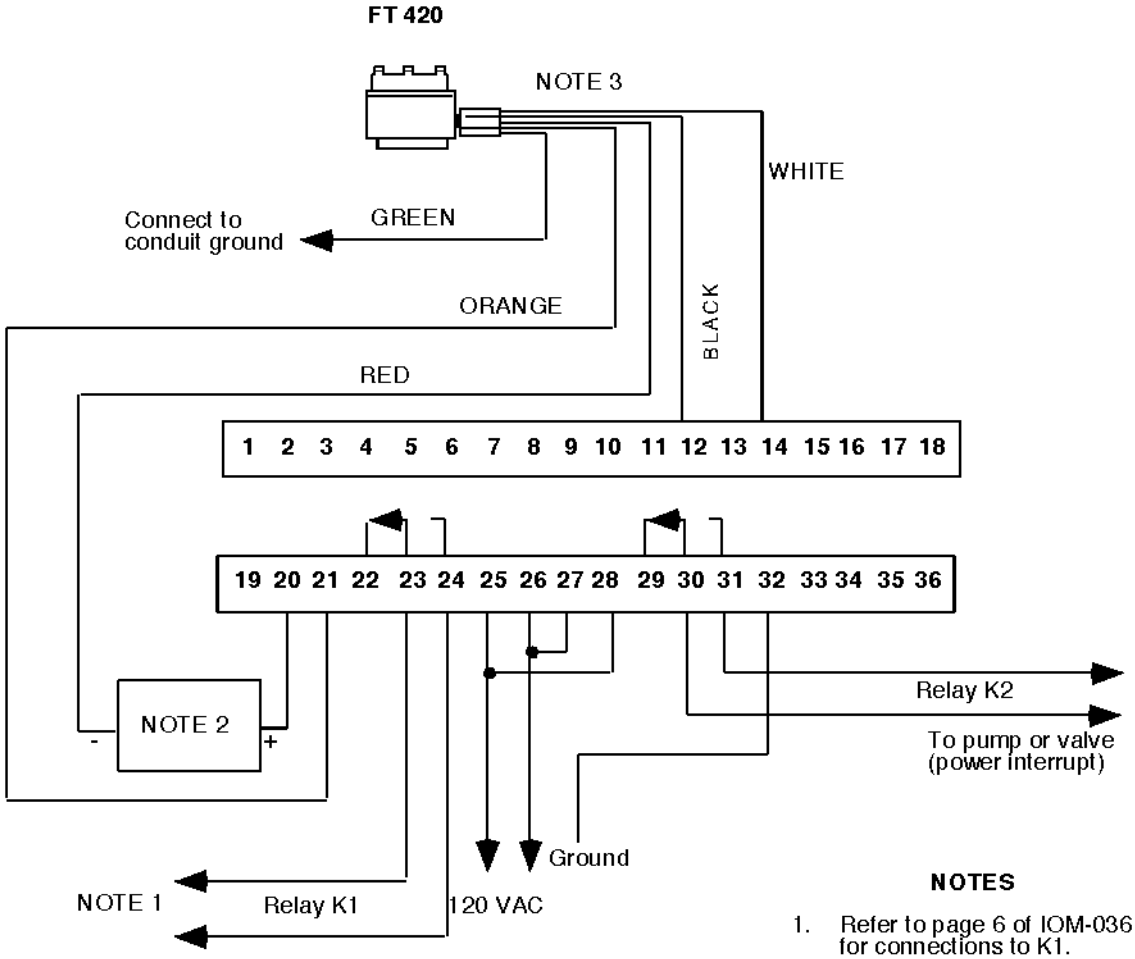

NOTES

1. Refer to page 6 of IOM-036 for connections to K1.
2. Analog device. Observe polarity.
3. Use shielded cable for transmitter connections. Connect shield to terminal 32 only.

BadgerMeter,Inc.
P. O. Box 245036 Milwaukee, WI 53224-9536
Telephone: (414) 355-0400
Fax: (414) 355-7499